12HRL365

HRL Series

MH27487

The Narada High Rate range of VRLA batteries provide reliable battery backup to any High Rate UPS application. All Narada High Rate series batteries use optimized plate technology and a patented post design offering exceptional service life.

TECHNICAL FEATURES:

- Flame Retardant ABS Cover and Container, UL94 V-0, LOI>28%
- Patented copper alloy terminal design
- Epoxy TPS design for high reliability post seal
- 6 months of storage at 77°F (25°C) with a capacity > 80%
- Initial capacity at 100%
- Low pressure one-way flame arresting valve(s) UL1989
- Absorbent Glass Mat (AGM) Sealed Technology, Recombination efficiency of 99.9%

COMPLIANCE AND SAFETY:

- ISO 9001:2000 and ISO 14001:2004 certified production facilities
- UL Recognized Component 924, for use in or with listed UL1778, UL1989 and UL924 systems
- IEC60896-21/22
- BS6290 part 4 / Eurobatt guide
- Manufactured under system ISO9001(TUV)
- All batteries meet or exceed IEEE recommended practices

TRANSPORTATION:

- Classified as Nonspillable UN 2800 and meet the Nonspillable criteria listed in DOT-CFR Title 49, 171-189 (d) (3) (i) and (ii) and exempt from CFR 49, Subchapter C requirements
- Meets transportation conditions of IMDG exemption 238, IATA/ICAO Special Provision A67 (Not Restricted)

WPC @ 15 min 1.67 VPC / 77°F (25°C)	365 watts
WPC @ 5 min 1.60 VPC / 77°F (25°C)	784 watts
Ah @ 20hr 1.75 VPC / 77°F (25°C)	93 Ah

Nominal Voltage	12V
Float Charge Voltage @25°C (2.23 – 2.27vpc)	13.5 – 13.62
Max. Charge Current (A) (5 hour rate @ 1.75vpc)	18.6 Amps

Electrolyte Absorbed H_2SO_4	1.300

Short Circuit Current (A)	2200 Amps
Internal Resistance (mΩ)	6.5

Terminal Type	Torque
M6-F (Top Insert)	78 in-lbs (8 ±1 Nm)

Dimension	in	mm
Length	11.98	304
Length Base	11.93	303
Width	6.58	167
Overall Height	8.32	211

Weight	Lbs.	Kg
	66.4	30.2

OPERATING PARAMETERS

Float Charging Voltage	13.5V / 2.25vpc @ 77ºF (25°C)
Equalize /Cycle	14.0V – 14.3V 2.33Vpc to 2.38Vpc @ 77°F (25°C)
See Operations and Maintenance Manual for specific guidelines and recharge times	

Charging Temperature Compensation	-2 mV/cell/°F > 77°F (-3.6 mV/cell /°C > 25°C)
	+2 mV/cell/°F < 77°F (+3.6 mV/cell/°C < 25°C)

Maximum AC Ripple (Charger)	0.5% RMS, 1.5% peak-to-peak for float charge voltage for best results

Operating Temperature Range	
Nominal	+74°F (24°C) to 80°F (27°C)
Charge	-20°F (-28°C) to +122°F (50°C)
Discharge	-40°F (-40°C) to +140°F (60°C)
Storage Temperature Range	-4°F (-20°C) to +104°F (40°C)

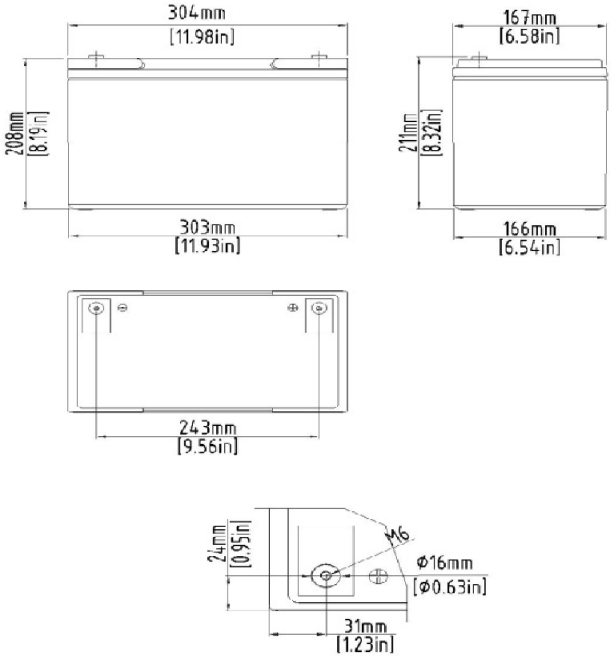

Constant Power Discharge Watts per cell (25°C, 77°F)								
End vpc	5min	10min	15min	20min	30min	45min	1h	2h
1.6	663	480	373					
1.63	655	474	369					
1.67	632	467	365	291	216	156	123	67.5
1.7	618	457	359	287	214	155	122	67.1
1.75	583	439	345	277	208	150	119	66.0
1.8	554	418	328	264	199	146	116	64.6
1.83	534	402	316	255	194	143	113	63.7
1.85	522	393	309	251	191	141	112	63.2

Constant Current Discharge Amperes (25°C, 77°F)									
End vpc	5min	10min	15min	20min	30min	40min	50min	1h	2h
1.60V	421	194							
1.67V	408	191	111	62					
1.70V	390	187	109	61					
1.75V	368	180	106	60	33.0	17.7	9.4	9.0	4.65
1.80V	343	171	102	58	32.3	17.4	9.2	8.8	4.55
1.83V	325	164	99	57	31.8	17.2	9.1	8.7	4.47